DROK DC Adjustable Buck Converter

Parameters

Model	200704 /200705	200706 /200707	Input Voltage	6.0~70V
Output Current	0~10A	0~20A	Output Voltage	0.0~60V
Output Power	0~600W	0~1200W	Typical Output Ripple	100mv VPP
Maximum Output Voltage	(Input Voltage ÷ 1.1) - 2			
Input Voltage Measurement Resolution	0.01V		Output Voltage Setting Measurement Resolution	0.01V
Current Setting Measurement Resolution	0.01A		Input Voltage Measurement Accuracy	±1% + 5 digits
Output Voltage Setting and Measurement Accuracy	±0.4% + 1 digit		Output Current Setting and Measurement Accuracy	±0.5% + 3 digits
Cooling Fan On Condition	Current>2A Power>50W Temperature>50°C (122°F)			
Cooling Fan On and Off Condition	Current <1.5A Power <45W Temperature <45°C (113°F)			

Protection

External Temperature Protection	0~110°C, Default: Off	Input Over Voltage Protection	Default: 71V
Input Under Voltage Protection	4.8~71V Adjustable, Default: 4.8V		
Output Over Voltage Protection	0~65V, Default: 65V		
Output Over Current Protection	0~16A, Default: 16A		
Output Over Power Protection	0~950W, Default: 950W		
Over Temperature Protection	60~110°C (140°F~230°F), Default: 95°C (203°F)		
Timeout Protection	0~100H Adjustable, Default: Off		
Over Capacity Protection	0~9999AH Adjustable, Default: Off		
Over Energy Protection	0~9999WH Adjustable, Default: Off		

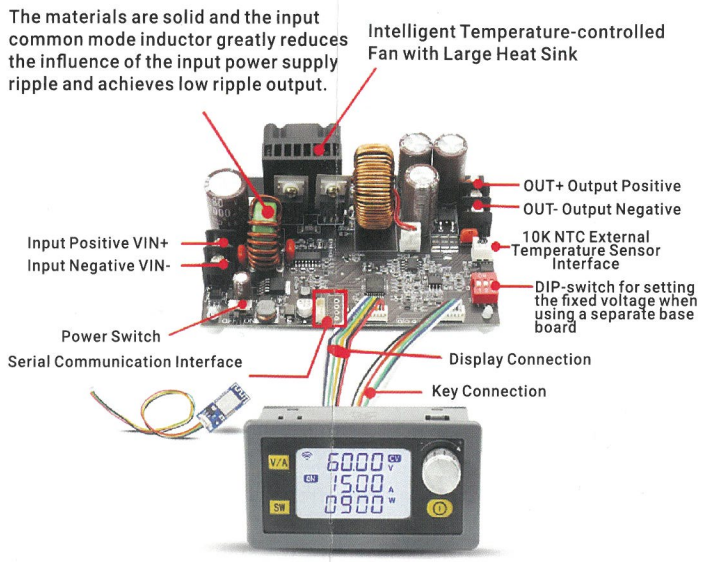

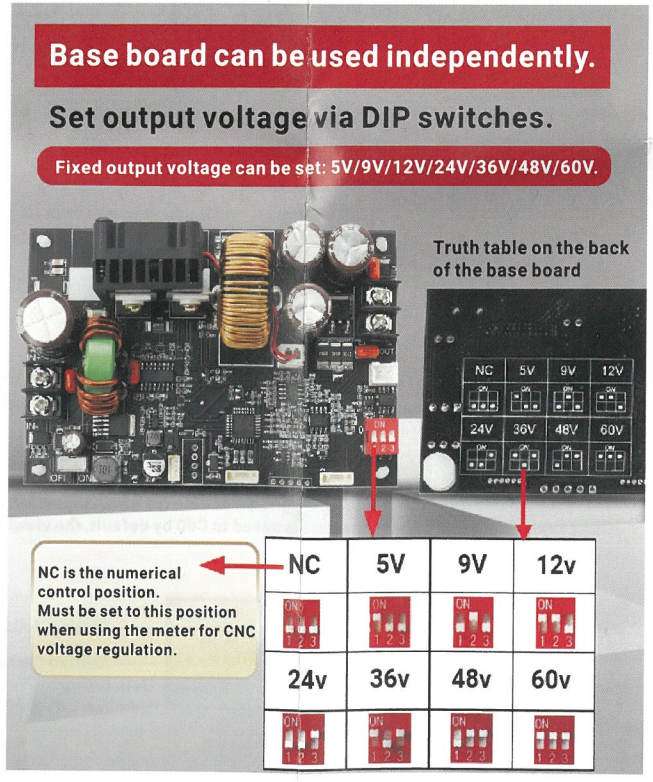

Press and hold the SW button for 2 seconds to enter the parameter setting interface.

Interfaces / Keys	Operating Interface	Setting Voltage and Current Interface	Parameters Setting Interface
V/A	**Short press:** Enter the interface of setting voltage and current. **Long press:** None	**Short press:** Toggle the display to set voltage and current, and exit to save. **Long press:** Exit voltage and current setting and save the setting.	None
SW	**Short press:** Toggle input/output voltage display. **Long press:** Enter parameter setting interface.	**Short press:** Moving voltage/current digits. **Long press:** None	**Short press:** Switch the desired parameter. **Long press:** Save the parameter and exit the parameter setting interface.
⏻	**Short press:** Turn on/off output. **Long press:** Zero the data in the capacity/energy/time interface.	**Short press:** Turn on/off output. **Long press:** None	**Short press:** OAH/OWH/OHP function switching. **Long press:** OAH/OWH unit switching.
	Short press: Power, Capacity, Energy, Time **Long press:** Enable/disable key lock function.	**Short press:** Moving voltage/current digits. **Long Press:** None	**Short press:** Moving parameter digits. **Long Press:** None
	Default adjustment of voltage/current/no action depending on settings	Adjustment of set voltage/current value	Adjusting parameter values

Instructions for Use

1. Setting Voltage and Current

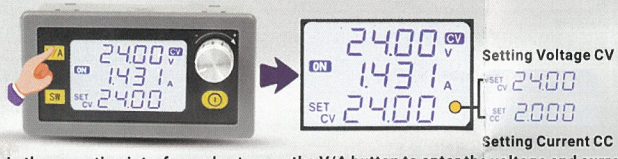

In the operating interface, short press the V/A button to enter the voltage and current setting interface. "SET" will be displayed at the bottom of the LCD screen, "CV" and the voltage blink to indicate voltage setting. At this time, short press the SW or encoding potentiometer button to move the voltage digits, and rotate the encoder to adjust the set voltage.

Short press the V/A button again, a blinking "CC" will be displayed at the bottom of the LCD screen, and the current will blink to indicate current setting. Short press the SW or the encoding potentiometer button to move the current digits, and rotate the encoder to adjust the selected current. Short press the V/A button again to exit and save the settings, returning to the operating interface. Also, press and hold the V/A button for 2 seconds or wait for 6 seconds without any key action, the system will automatically exit and save the settings, returning to the operating interface.

2. Quickly Set Voltage or Current

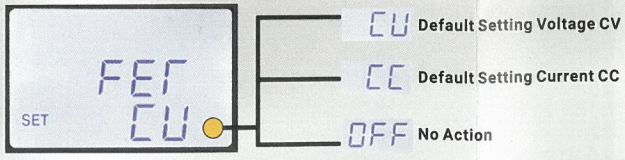

In the parameters setting interface, set the parameter FET to CV or CC, and rotate the encoder in the operating interface, then it will enter the interface of setting voltage and current. Rotate the encoder to quickly set the voltage or current.

3. Setting Parameters

Parameters setting interface

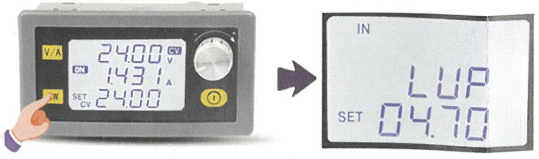

3.1 In the operating interface, press and hold SW for 2 seconds to enter the parameters setting interface.
3.2 Short press SW to switch the parameters to be set, short press the encoder button to move the digits, rotate the encoder and adjust the parameters.
3.3 In the interface of maximum capacity (OAH)/maximum energy (OPH)/maximum running time (OHP), short press the "ON/OFF" button to select the corresponding function to be turned on or off. If off, "---" is displayed.
3.4 In the maximum capacity (OAH)/maximum energy (OPH) parameter interface, long press "ON/OFF" button to select the capacity range (9.999AH/99.99AH/999.9AH/9999AH,9.999WH/99.99WH/999.9WH/9999WH).
3.5 When the parameters setting is finished, press and hold the SW button for 2 seconds to exit the setting interface, and the parameters will be saved automatically.

4. Input and Output Voltage Display

Input voltage display: IN

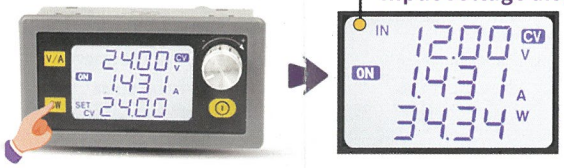

Short press the SW button in the operating interface to switch the input and output voltage display.

5.View Power(W)/Capacity(AH)/Energy(WH)/Time(H)

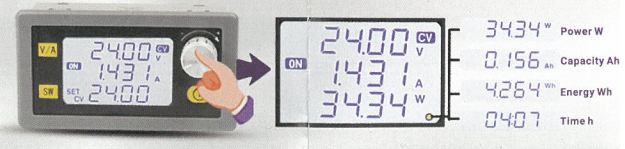

In the operating interface, short press the encoder button to switch the display of power(W)/capacity(AH)/energy(WH)/time(H).

6. Lock Function

Symbol for Locked Status

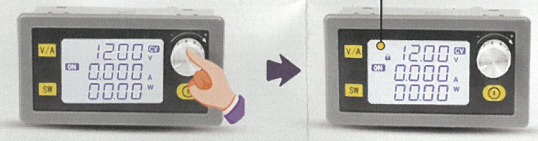

In the operating interface, long press the encoder button for 2 seconds to lock the set voltage and current to prevent misoperation; long press the encoder button for 2 seconds to unlock.

7. Data Group Function

This product has Cd0~Cd9 a total of 10 groups of data (of which Cd8=12V Cd=24V can not be adjusted), the data is saved to Cd0 by default, the viewing and modifying method is as follows.

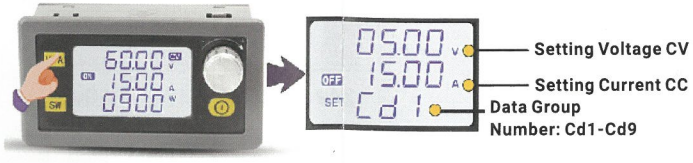

7.1. Press and hold the V/A key for 2 seconds to enter the interface of data group, the upper 2 lines display the set voltage value CV and set current value CC of the data group, and the lower line displays the group serial number CD1~CD9.
7.2 Short press the V/A key to toggle between setting voltage CV, setting current CC, and data group serial number CD to modify the parameters via the encoder.
7.3. After the data set has been confirmed, press and hold V/A to call up the data group and return to the operating screen.

8. Other Functions

8.1 Capacity/Energy/Runtime Statistics

After the power is turned on, the statistics will start automatically, after the power is turned off, the value of the previous state will be displayed, and after the power is turned on again, the recording will start again automatically; in the corresponding interface, long press the ON/OFF button for 2 seconds will automatically clear the corresponding data.

8.2 Setting Maximum Capacity/Maximum Energy/Maximum Runtime

8.2.1. Setting Maximum Capacity(OAH)/Energy(OPH): When OAH/OPH function is activated, when the statistical capacity/energy is higher than the set maximum capacity/energy, the power supply will automatically shut down the output and display "OAH"/"OPH" in blinking. After the alarm is lifted, the capacity/energy statistics will be cleared automatically.

8.2.2.Setting Maximum Discharge Time (OHP): After activating the OHP function, when the power supply running time is greater than the set maximum discharge time, the power supply will automatically turn off the output and display a blinking "OHP"; after the OHP alarm is lifted, it will automatically clear the time statistics.This function can well realize the quantitative/timed power supply.

Note: When the OAP/OPH and OHP functions are not turned on, the power supply will automatically record the capacity/energy and the running time. After turning on the OAH/OPH and OHP functions, the power supply will automatically turn off the output when it reaches the set value; after turning on the OHP function, the running time of the power supply will be in the countdown mode; the power supply will be in the countdown mode.

Installation Opening Size Diagram

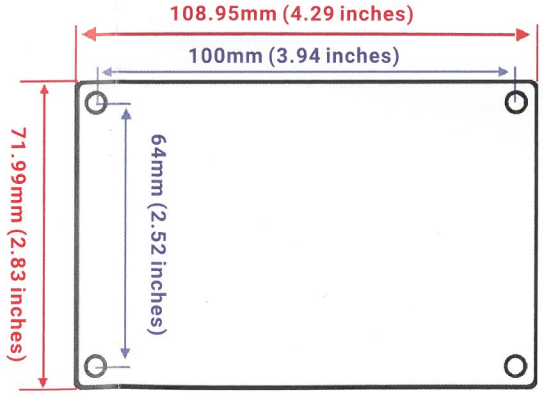
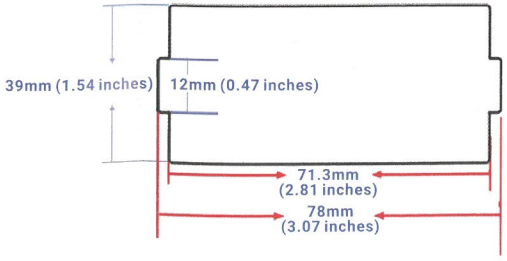
Suggested opening sizes are shown below: